SPBMW6-AG25U-X

Defrost By Time | Defrost By Weight | Direct Access Menu | 25L | Easy Installation

SUPERCHEF
MADE IN ITALY

Microwave with Grill
Built-in Cooking

25L Capacity
Stainless Steel frame, Stainless Steel Cavity
Convection Power: 2500W
5 Microwave Power Levels
3-in-1 Functions
10 Auto Menus
Kitchen timer
Defrost by weight / time
Cooking end signal
Child safety lock
Full glass face
VDE plug , 230V~50Hz

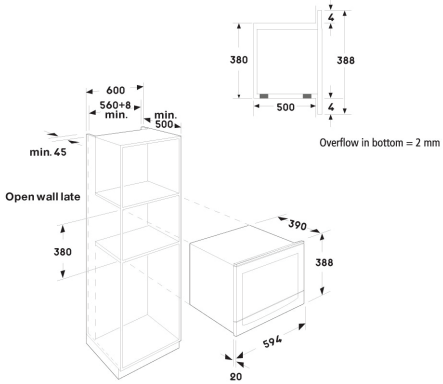

External Dimensions

- H 388 mm
- W 595 mm